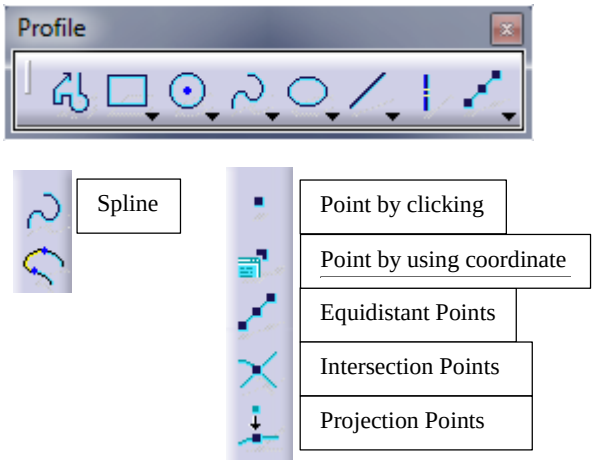

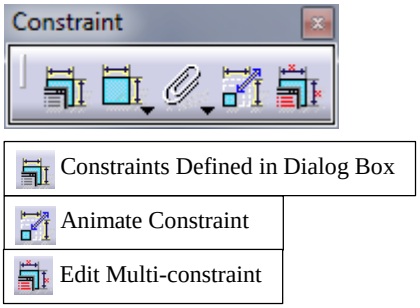

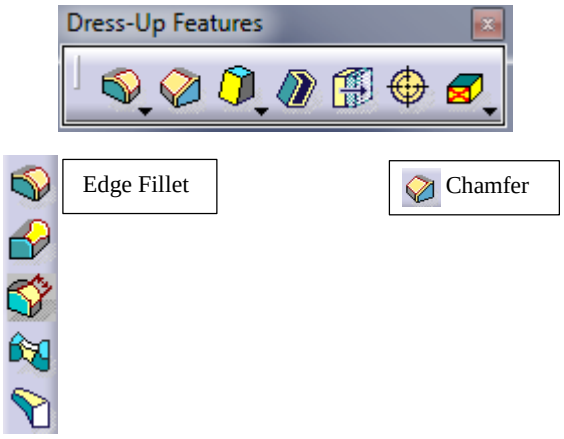

Teacher: Ehsan Fathi, PHD Student in Mechanical Engineering at University of Birjand
Email: Ehsanfathi_eh@yahoo.com
Website: catia98.ir
Tel: 09386249330

تمرین - ۱

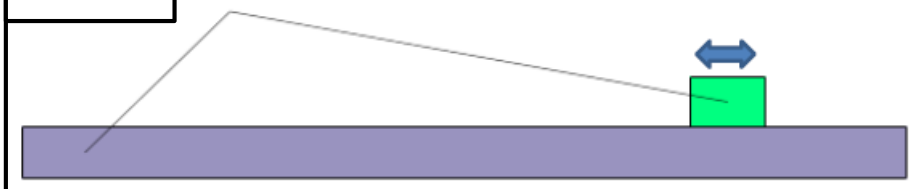

تمرین - ۲

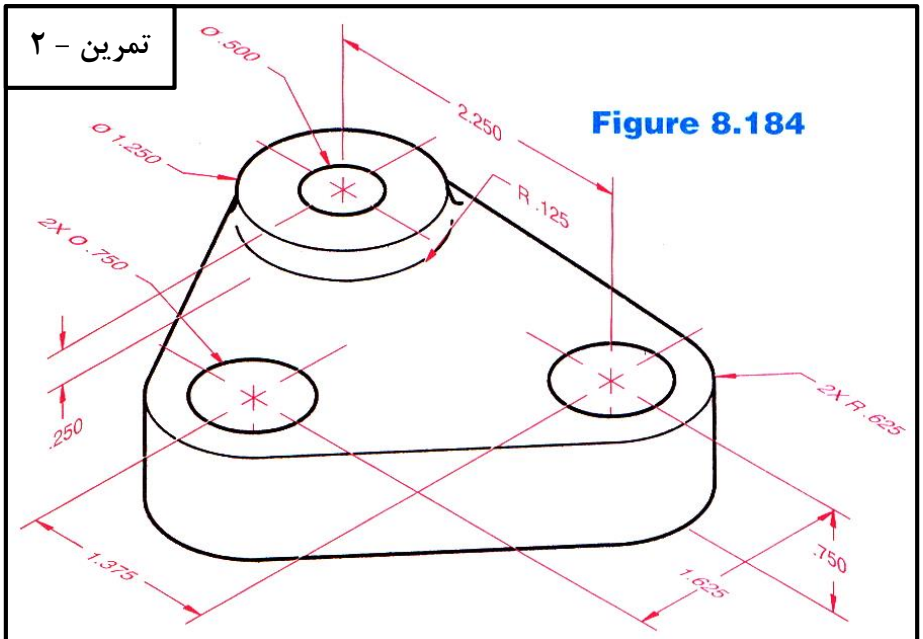

تمرین - ۳

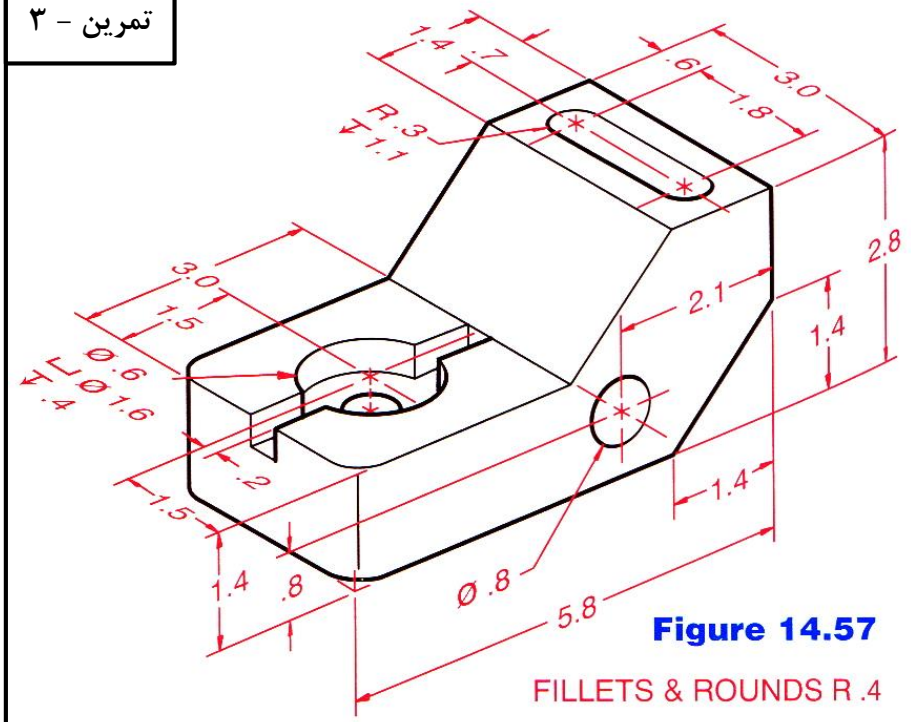

Teacher: Ehsan Fathi, PHD Student in Mechanical Engineering at University of Birjand
Email: Ehsanfathi_eh@yahoo.com
Website: catia98.ir
Tel: 09386249330